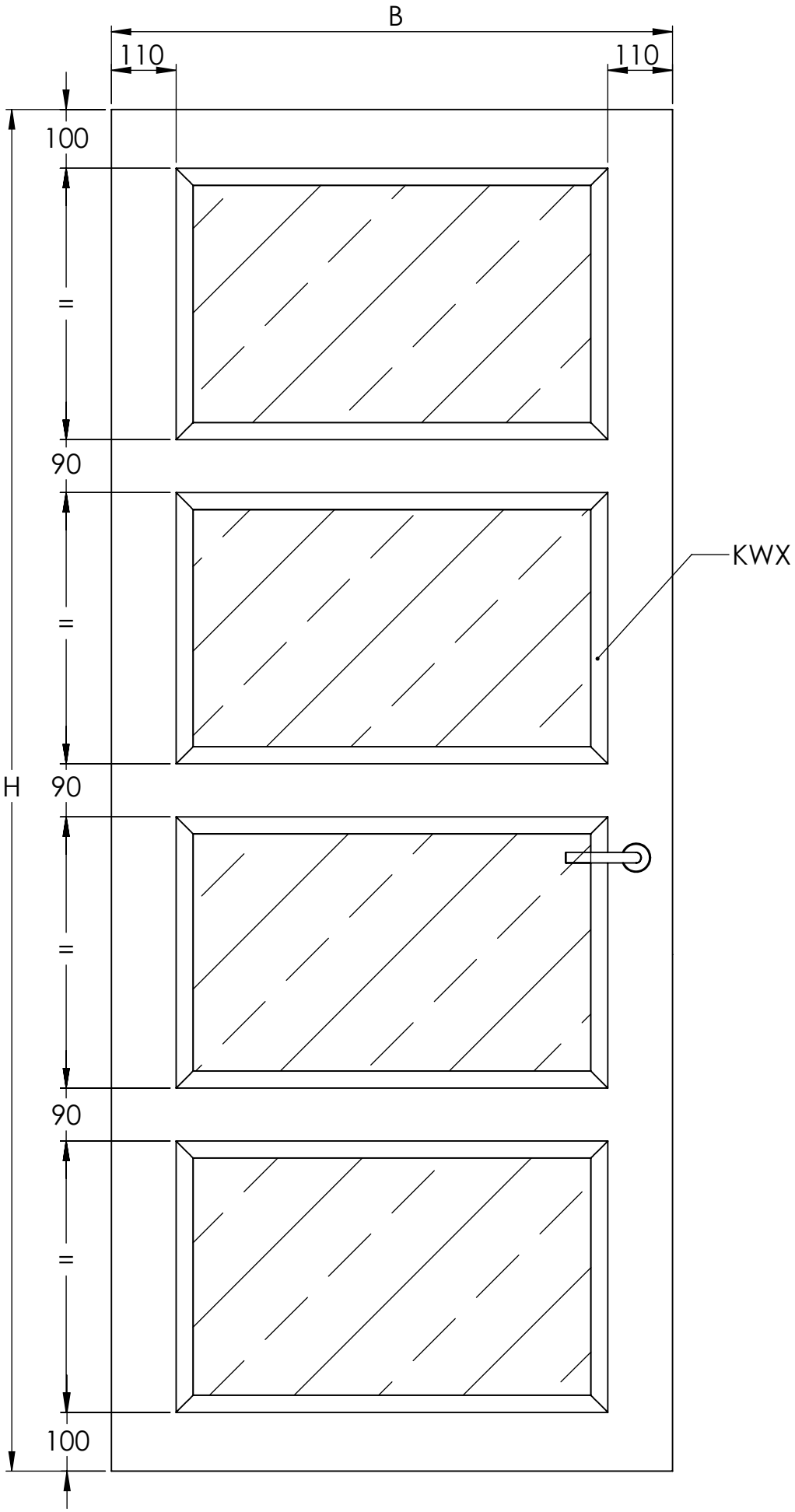
B
110
110
100
=
90
=
KWX
H
90
=
90
=
100